INNOVATION ENVIRONMENT

Build the largest one-stop comprehensive platform for ecological environment products and services in China

一诺环境
INNOVATION ENVIRONMENT

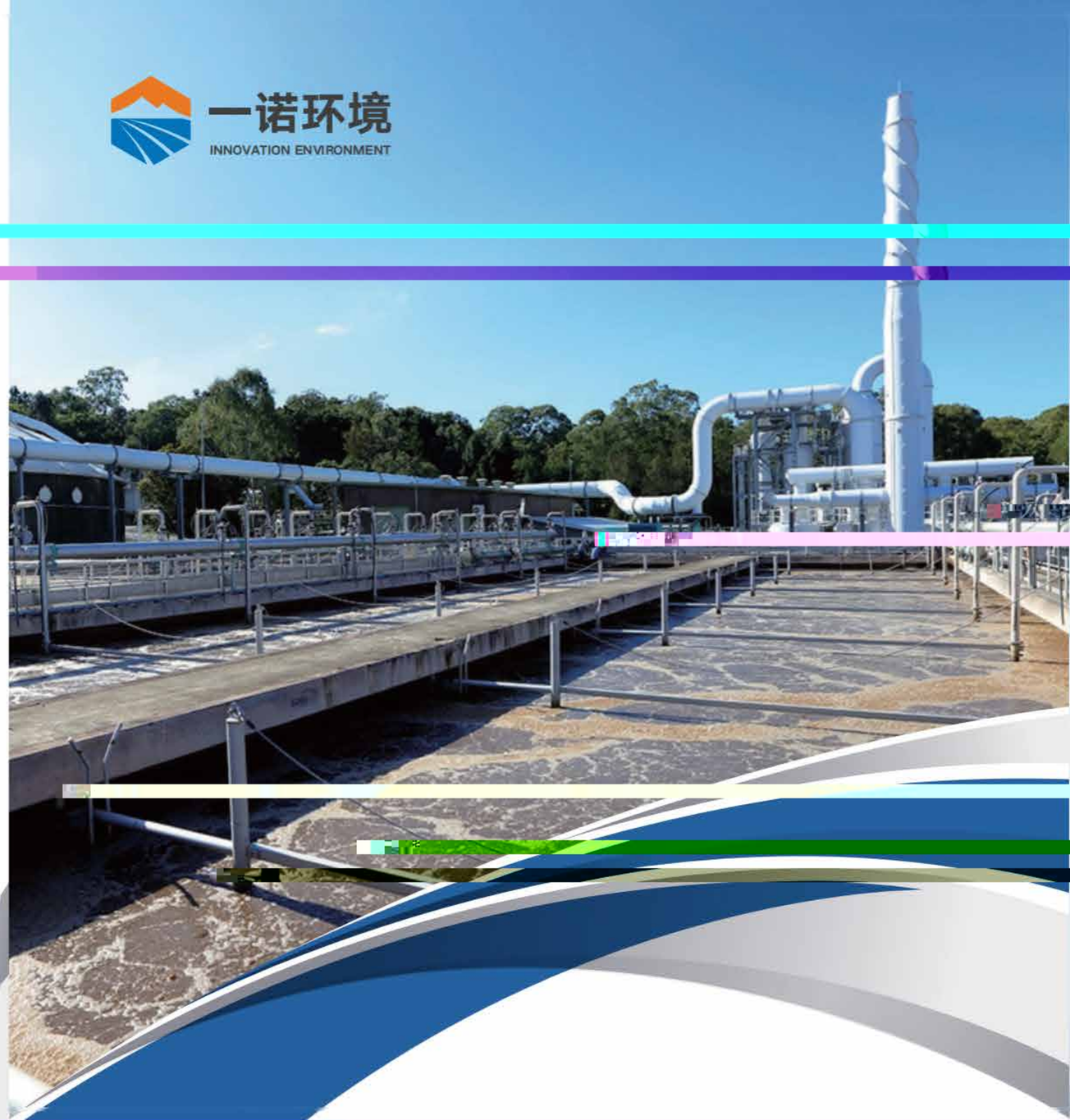

INNOVATION ENVIRONMENT
Official WeChat Account

[Sales and Technical Consultation]

LIAONING INNOVATION ENVIRONMENT GROUP CORP., LTD
www.yinuohuanjing.com
400-082-9898
INNOVATION Environmental Industrial Park, Beipiao Economic Development Zone, Chaoyang City,
Liaoning Province

Supporting Equipment for Sewage Treatment Plants





一诺环境
INNOVATION ENVIRONMENT

I. Pretreatment Equipment Series

(Bar Screen, Conveyor, and Press)

CF Type Rotary Solid-Liquid Separator

1.Application

The CF Type Rotary Solid-Liquid Separator (also known as Rotary Bar Screen Cleaner) is an advanced solid-liquid separation device for water treatment.It is mainly used at the inlets of municipal wastewater treatment plants, residential community pretreatment units, municipal storm and sewage pump stations, waterworks, and power plant cooling water systems.This equipment is also widely applied in wastewater treatment projects across industries such as textiles, dyeing, food processing, aquaculture, papermaking, brewing, slaughtering, and leather manufacturing.It is regarded as an ideal solid-liquid separation device in the water treatment field.

2.Structure and Working Principle

The equipment operates in a rotary manner.
Specially shaped plow-type rake teeth are arranged in sequence on a horizontal shaft to form a rake chain. According to the water flow rate, the rake teeth are assembled with different spacing and installed at the inlet of a pump station or water treatment system.
When the drive unit moves the rake chain upward from the bottom, debris in the water is lifted by the rake teeth while water passes through the gaps between them.
After the rake chain reaches the top position, its movement direction reverses and moves downward. The collected debris falls off the rake teeth by gravity.
When the rake chain returns to the bottom, another cycle begins.
This continuous reciprocating operation removes debris from the water and achieves solid-liquid separation.



3.Model Description

CF–□–□
- I — Single Unit (optional) II — Combined Unit
- Equipment Width B (mm)
- Rotary Solid-Liquid Separator

Parameter \ Model		CF-500	CF-600	CF-700	CF-800	CF-900	CF-1000	CF-1100	CF-1200	CF-1300	CF-1400	CF-1500
Equipment Width B (mm)		500	600	700	800	900	1000	1100	1200	1300	1400	1500
Channel Width B_1 (mm)		B+100										
Effective Channel Width B_2 (mm)		B-157										
Foundation Bolt Center Distance B_3 (mm)		B+200										
Total Equipment Width B_4 (mm)		B+350										
Rake Spacing	t=100	1≤b≤10										
	t=150	10<b≤50										
Installation Angle α (°)		60～85										
Channel Depth H (mm)		800～12000										
Height from Discharge Outlet to Platform H1 (mm)		600～1200										
Total Equipment Height H_4 (mm)		H+H1+1500										
Rear Frame Height H	t=100	≈1000										
	t=150	≈1100										
Rake Chain Running Speed v (m/min)		≈2.1										
Motor Power N (kW)		0.55～1.1			0.75～1.5		1.1～2.2			1.5～3.0		
Head Loss (mm)		≤20 (when unobstructed)										
Soil Bearing Capacity	P_1 (KN)	20						25				
	P_2 (KN)	8						10				
	ΔP (KN)	1.5						2.0				

Note: P is calculated based on H = 5.0 m. For every additional 1 m increase in H, the total load P = P (or P) + ΔP, where t represents the rake chain pitch.

Pretreatment Equipment Series

Pretreatment Equipment Series 辽宁一诺环境产业集团有限公司

Pretreatment Equipment Series 辽宁一诺环境产业集团有限公司

Pretreatment Equipment Series
辽宁一诺环境产业集团有限公司
LIAONING INNOVATION ENVIRONMENT GROUP CORP., LTD

Pretreatment Equipment Series
辽宁一诺环境产业集团有限公司
LIAONING INNOVATION ENVIRONMENT GROUP CORP., LTD

QS Series Hoist

1. Main Technical Parameters and Installation Dimension Tabl

Parameter \ Model		QS-1×2	QS-2×2	QS-3×2	QS-4×2	QS-5×2
Hoisting Force t (T)		2	4	6	8	10
Screw Diameter d (mm)		38	40	44	46	54
Reduction Ratio i		1:2	1:2	1:2	1:3	1:3
Installation Dimension (mm)	a	300	300	500	500	500
	L	1000~3000				

Parameter \ Model		QS-5×2	QS-8×2	QS-10×2	QS-15×2	QS-20×2	QS-25×2
Hoisting Force t (T)		10	16	20	30	40	50
Screw Diameter d (mm)		48	55	60	75	75	80
Output Speed n (r/min)		24	24	24	18	18	18
Motor Power N (kW)		3.0	4.0	5.5	7.5	10.0	12.0
Output Torque M (N·m)		2400	3600	5000	7000	10000	12500
Installation Dimension (mm)	a	550	550	650	650	800	800
	F	500	500	600	600	750	750
	G	180	180	250	320	320	320
	L	1000-1500	1600-2000	2100-2500	2600-3000	3100-3300	3400-3500

2. External Installation Dimension Drawing

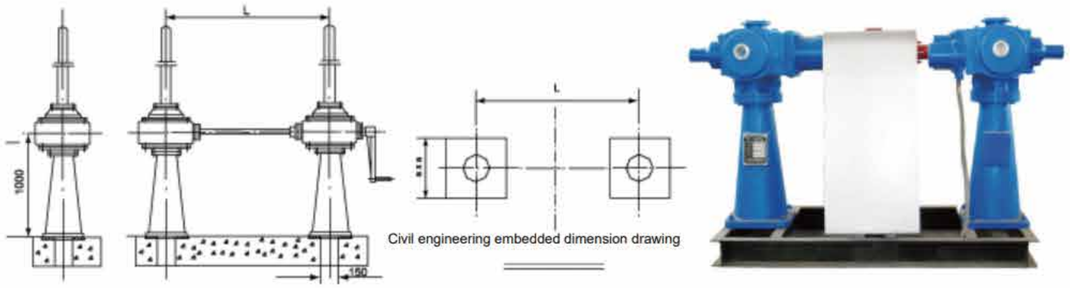

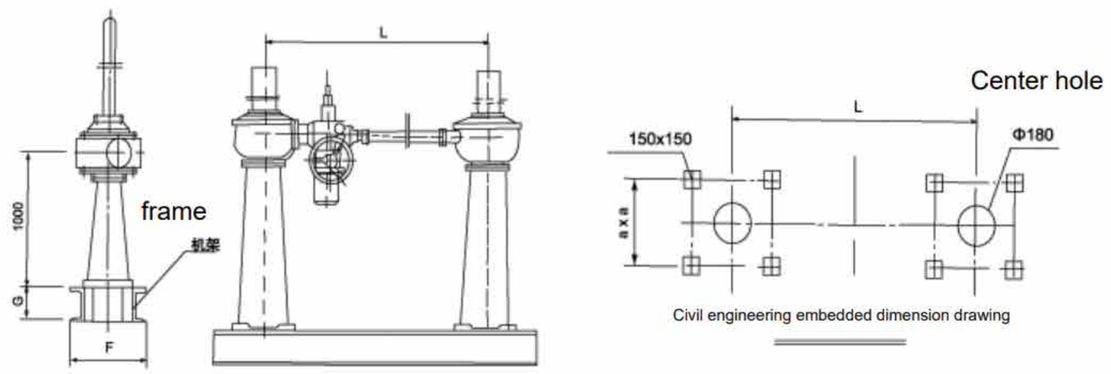

诺环境
INNOVATION ENVIRONMENT

2. Sedimentation tank, scraper and suction sludge machine series equipment

Sedimentation tank, scraper and suction sludge machine

Sedimentation tank, scraper and suction sludge machine 辽宁一诺环境产业集团有限公司

一诺环境
INNOVATION ENVIRONMENT

3. Aeration Series Equipment

YZB Rotary Disc Aerator

1. Purpose

The YZB Rotary Disc Aerator is suitable for the Obel oxidation ditch process for the biochemical treatment of municipal and various industrial wastewaters, oxygenating the water within the oxidation ditch.

2. Structure and Working Principle

This device is a horizontal shaft surface aerator. Each disc consists of two semicircular discs connected to the main shaft by a flange and evenly arr
The disc surface is densely covered with trapezoidal protrusions, circular depressions, and air holes. When the drive unit drives the main shaft and the discs, they begin to rotate, thoroughly agitating, pushing, and mixing the wastewater. The special surface of the discs increases the amount of air introduced into the water and forcibly divides and evenly divides bubbles, thereby greatly improving oxygenation capacity.



3. Model Description

YZB—□—□
- Horizontal Shaft Span L (mm)
- Disc Diameter D (mm)
- Rotary Disc Aerator

4. Main Technical Parameters and Installation Dimension Table

Parameter \ Model		YZB—1400×3000	YZB—1400×4000	YZB—1400×5000	YZB—1400×6000	YZB—1400×7000	YZB—1400×8000	YZB—1400×9000	YZB—1400×10000
Disc diameter D (mm)		1400							
Horizontal span C (mm)		3000	4000	5000	6000	7000	8000	9000	10000
Number of discs n (plates)		11	15	19	24	28	30	36	40
Effective water depth H (m)		2.5~5.0（According to user requirements							
Immersion depth h (mm)		300～500							
Rotational speed n (r/min)		51	47	47	47	47	47	47	47
Motor power N (kW)		7.5	11.0	15.0	18.5	22.0	30.0	30.0	37.0
Oxygenation capacity per disc Q (kgO2/h)		0.8~2.0							
Oxygenation capacity at 500mm immersion q (kgO2/h)		17.5	26.5	33.5	42.0	49.0	56.0	63.0	70.0
Power efficiency k (kgO2/kW·Oh)		1.8~2.2							
Disc installation density (plates/m)		3~5							
Installation dimensions (mm)	L_1	160	160	160	160	160	160	160	160
	L_2	640	640	640	640	640	640	640	640
	L_3	800	800	800	800	800	800	800	800
	H	235	250	290	290	290	290	290	290
	A	400	400	400	400	400	400	400	400
	B	233	295	360	360	360	360	360	360
	C	180	240	270	270	270	270	270	270
	E	91	11	128	128	128	128	128	128
Civil engineering load	P_1（KN）	16	18	20	24	26	28	30	32
	P_2（KN）	5.0	5.5	6.0	6.5	7.0	7.5	8.0	8.5
	M(N.m)	1460	2140	2920	3600	4285	5840	5840	7200

5. Main Features

- The drive unit utilizes a vertical outdoor motor and a conical cylindrical gear reducer with hardened tooth surfaces, resulting in high load capacity, compact structure, small size, and light weight.
- An elastic pin-gear coupling ensures high torque transmission with minimal bulk, allows for radial and angular misalignment, and simplifies installation.
- The disc is extruded from reinforced polyurethane, offering high strength, lightweight, ease of cutting, corrosion resistance, excellent rigidity, and heat resistance.
- The tail unit utilizes a self-aligning bearing and floating support to mitigate installation errors, achieve automatic alignment, and compensate for shaft expansion and contraction due to temperature differences, ensuring proper operation.

Purpose

n after installation

This device is a horizontal-shaft surface aerator with brushes evenly arranged on the main shaft. When the drive mechanism rotates the

Secondary irriga

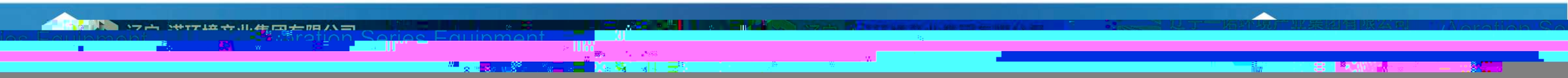

一诺环境
INNOVATION ENVIRONMENT

4. Sludge Dewatering, Dosing Equipment, and Agitation Equipment Series

DNT Belt-Type Sludge Thickener and Dehydrator

1. Purpose

The DNT Belt-Type Thickener and Dehydrator is primarily used for thickening and dehydrating excess sludge or mixed sludge from municipal wastewater biochemical treatment. It is a highly efficient dehydration device that forms sludge cakes. It is suitable for sludge dehydration in various industries, including water supply and drainage, papermaking, foundry, leather, textiles, chemicals, and food.

2 Working Principle

This equipment primarily consists of a belt thickener and a dewatering unit. After the sludge is treated with flocculant and thoroughly mixed in a sludge mixer, it flows into the gravity dewatering section. Under the action of gravity, a large amount of free water in the sludge flows out through the gaps in the filter belt and into a water collection tank. The sludge is then guided through a wedge-shaped pre-pressing section, where it is gradually flattened and gently squeezed for further dewatering. It then enters the S-shaped multi-roller pressing section, where the sludge is sandwiched between upper and lower filter cloths and repeatedly squeezed by rollers of varying diameters. This shearing action promotes further dewatering, forming a sludge cake. Finally, a scraper removes the cake and transports it away, while the upper and lower filter belts are rinsed and reused.



3. Model Description

DNT–□
- Filter Belt Width B (mm)
- Belt Thickener and Dewatering Unit

4. Main Technical Parameters and Installation Dimension Table

Parameter / Model							
Processing Capacity Q (m³/h)		5~10	10~20	20~30	30~40	40~60	60~80
Dimensions (W×L×H)		920×4490 ×1900	1420×5500 ×1900	1920×4490 ×1900	1920×5500 ×1900	2920×5500 ×1650	3420×5500 ×1650
Belt Speed V (m/min)		3.0~15 (concentration stage) 1.2~6.0 (dehydration stage)					
Concentration Motor Power N1 (kW)		0.55	0.55	0.75	1.1	1.5	1.5
Dehydration Motor Power N2 (kW)		0.75	1.5	1.5	2.2	3.0	5.0
Discharge Port Height h (mm)		1600	1600	1600	1600	1600	1600
Rinse Water	Water Consumption (m³/h)	4.0	7.5	12.0	15.0	25.0	30.0
	Water Pressure (MPa)	≥0.5					
Compressed Air	Air Consumption (m³/h)	0.3	0.3	0.4	0.4	0.4	0.4
	Air Pressure (MPa)	≥0.7					
Residual/ Mixed Sludge	Feed Moisture Content (%)	99.6/99.0					
	Cake Moisture Content (%)	80/78					
	Dry Sludge (kgds/h·m)	110~130					
	Hydraulic Load (m³/h·m)	22~26/12~16					

5. Main Features

- The steplessly adjustable motor drive allows for instant speed adjustment and high adaptability.
- Specially designed flushing nozzles and anti-clogging devices ensure clean filter belt rinsing;
- The dewatering head rollers feature a T-shaped drain chute for rapid water discharge; the gravity dewatering section features an inclined design, which increases the static head of the sludge, enhancing dewatering efficiency and ensuring full thickening before pressing.
- [illegible] minimal chemical usage, excellent dewatering performance, and low operating costs.

Sludge Dewatering, Dosing Equipment, and Agitation Equipment Series
辽宁一诺环境产业集团有限公司
LIAONING INNOVATION ENVIRONMENT GROUP CORP., LTD

HTJY Fully Automatic Dosing Device

JY Type Dosing Device

1. Purpose

During

Depending on the physical and chemical properties of the agents

PLB Umbrella-Shaped Vertical Mixer

3. Equipment Features

Easy Maintenance, Long Life:
Utilizing high-quality domestic or international reducers, the equipment boasts a service life exceeding 100,000 hours. With



辽宁一诺环境产业集团有限公司
LIAONING INNOVATION ENVIRONMENT GROUP CORP., LTD
Sludge Dewatering, Dosing Equipment, and Agitation Equipment Series

PLB Umbrella-Shaped Vertical Mixer

6 Main Technical Performance Parameters

Parameter \ Model	PLB-500	PLB-1500	PLB-2500
Impeller Diameter	500	1500	2500

